ITEM	QTY	DESCRIPTION	PART NUMBER
1	2	IGUS #KBRM-10 MH	U5002759P
2	1	BEARING, SLEEVE 10x14x10 BRONZE	U5002761P
3	1	CYLINDER, BACK-TO-BACK 25 DIA x 9x 15	U5003484P
4	4	MALE CONNECTOR, M5 x 6 DIA	U5003486P
5	1	RETAINING RING, EXTERNAL, 10MM, SS	U5007897P
6	1	CANILEVER STEPPED SHAFT W/RET. RING, 10 DIA, M10 THD, 74 LG	U5008070M
7	1	HEX LOCK NUT, M10X1.5 SS	U6002680P_EXP
8	1	SCREW HHCS, M10x40 SS	U6002787P_EXP

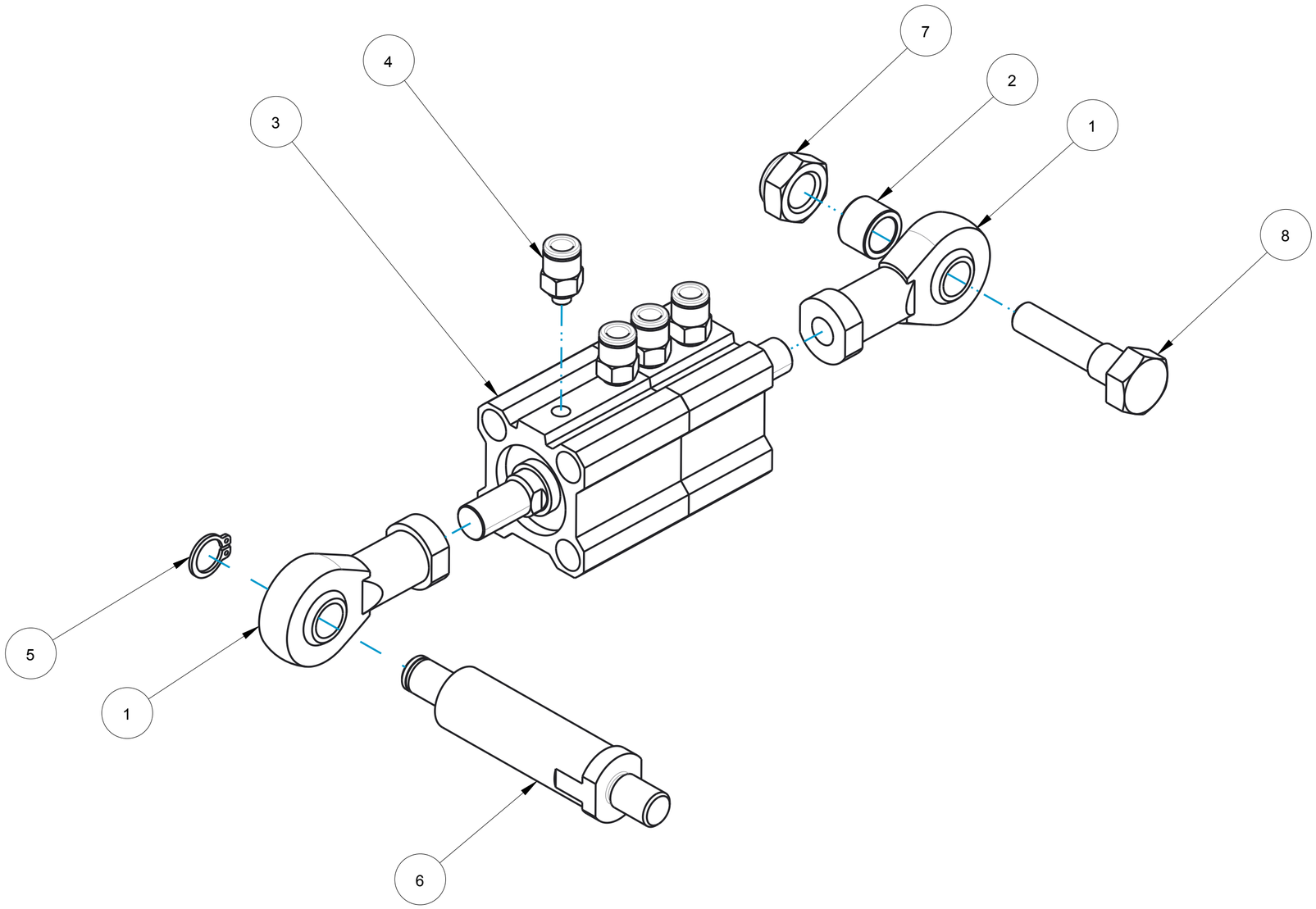

REV.	DESCRIPTION	BY / DATE	CHK'D / DATE
-	--		
-	--		
-	--		
-	--		
-	--		

NOTICE: THIS DRAWING AND ALL DATA, DESIGNS, STRUCTURES AND DESCRIPTIONS SHOWN THEREON ARE OUR PROPERTY. ALL PATENTABLE AND/OR COPYRIGHTABLE MATTER THEREON HAS BEEN PROTECTED BY APPLICATIONS FOR PATENT AND/OR COPYRIGHT. THIS DRAWING IS LOANED FOR A SPECIFIC PURPOSE AND MUST BE RETURNED ON DEMAND. AND MAY NOT BE COPIED, REPRODUCTED, OR DUPLICATED IN WHOLE OR IN PART, WITHOUT OUR SPECIFIC AUTHORIZATION IN WRITING.

1250M	5031	CARTON FEEDER	
MACHINE	SERIAL NUMBER	SUB ASSEMBLY	REMARKS

UNLESS OTHERWISE SPECIFIED: ALL DIMENSIONS MILLIMETER, DO NOT SCALE DRAWING

GENERAL TOLERANCE:
HOLE, SLOT H12
OTHERS js12

CONCENTRICITY ±0.02
PERPENDICULARITY ±0.02/CM
ANGULARITY ±0.25°

BREAK SHARP CORNERS
REMOVE ALL BURRS
FINISHED SURFACES 3.2 √(125)

METRIC

MATERIAL:

FINISH:

DRW BY: S.ALM	CHK'D :	ENGR. BY : M. FLAGG
DATE:02-OCT-06	DATE :	DATE : .....

TITLE: ASSY, LINK ARM CYLINDER

MeadWestvaco

Packaging Systems
Atlanta, Georgia
Deols, FRANCE

1/1	Released	C			-	N/A	1/1
SCALE	LEVEL	DRW. SIZE	DRW. N°	U5008073M	REV	VER	SHEETS